SHANGHAI CIPHY INDUSTRY CO.,LTD.

ANSI CLASS 2500 FOR PRESSURE SEAL CARBON STEEL OR STAINLESS STEEL CHECK VALVE BOLTED BONNET DESIGN

MODEL NO: FCAXTH-PS

LIFT CHECK VALVE PRODUCT'S SIZE:

PRESSURE GRADE	FROM	TO
CLASS 2500	1/2"	2"

DESIGN DESCRIPTION:

*** LIFT TYPE;**
*** BOLTED COVER;**
*** OPTIONAL: WELD COVER;**
*** SPRING LOADED DISC OR PISTON DISC;**
*** CONNECTRION: THREADED END, SOCKETED END**
*** THREAD TYPE(NPT, BSPT, DIN SERIAL ENDS)**
*** MATERIAL: A105, F304, F316, F11, F22, F304L, F316L**

WORKING PRESSURE AND TEMPERATURE

WORKING TEMPERATURE		
MATERIAL	CELSIUR SCALE	FAHRENHEIT
CARBON STEEL	-29^{0}C~425^{0}C	6^{0}F~822^{0}F
STAINLESS STEEL	-40^{0}C~550^{0}C	15^{0}F~1047^{0}F

GENERAL DESIGN SPECIFICATIONS:

ITEM	CLASS 2500
MANUFACTURE	API 602
PRESSURE-TEMPERATURE RATINGS	ANSI B16.34
INSPECTION AND TEST	API 598

TEST PRESSURE TO API 598

ANSI	SHELL (WATER)		SEAT (WATER)		SEAT (AIR)		BACK SEAT (WATER)	
CLASS 2500	65.9MPA	9375PSI	48.3MPA	6875PSI	0.6MPA	80PSI	48.3MPA	6875PSI

TRIMS SPECITIED DUE TO TABLE 3:

DISC SEAT SURFACE PART NO.2	BODY SEAT SURFACE PART
F6	F6
STELLITE	STELILITE
F6	STELILITE
F304	F304
F316	F316

OTHER MATERIALS ARE AVAILABLE UPON REQUEST.

PARTS AND MATERIAL (ASTM)

NO.	PARTS NAME	MATERIALS		
1	BODY	ASTM A105	ASTM F304	ASTM F316
3	SEALING SEAT	ASTM F6	ASTM F304	ASTM F316
4	SEALING RING	SS304		SS316
5	RETAINING NUT	ASTM A105	ASTM F304	ASTM F316
6	O-RING	CARBON STEEL		
7	P.S.LOCK NUT	ASTM A194-2H	ASTM A194 B8	
OTHER MATERIALS ARE AVAILABLE UPON REQUEST.				

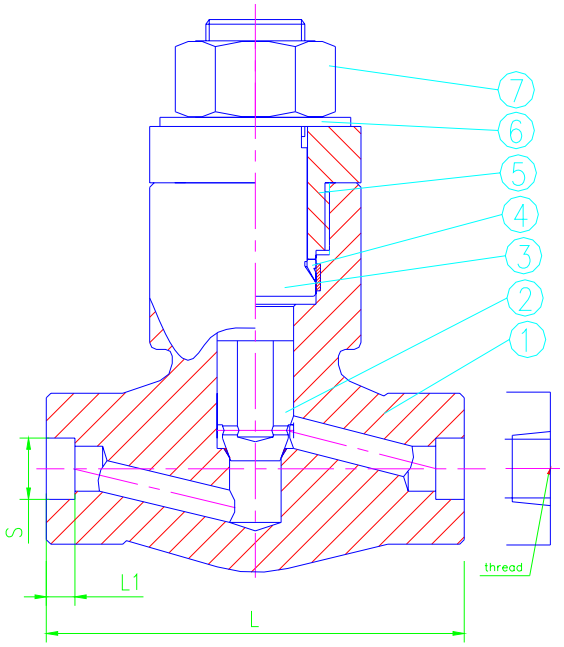

DIMENSIONS LIST(UNIT:MM):

DN	SIZ	S(THREAD)	S(SOCKET)	L1	L
15	1/2”	1/2”	21.8	9.6	186
20	3/4”	3/4”	27.1	12.7	186
25	1”	1”	33.8	12.7	186
32	1-1/4”	1-1/4”	42.6	12.7	232
40	1-1/2”	1-1/2”	48.7	12.7	232
50	2”	2”	61.1	15.9	279

*** We hereby reserve the rights of any alternative dimension that would help to improve our valve's quality and working efficiency**

SHANGHAI CIPHY INDUSTRY CO.,LTD
7G-1 Building, N0.515 Yishan Rd.
Shanghai, China
TEL:+86-21-5497 5962
FAX:+86-21-5497 5963
HTTP://WWW.CIPHY.CN
CIPHY@CIPHY.COM
COPYRIGHT©2004-[CIPHY]
ALL RIGHTS RESERVED.